AN3287
Application note

PLM smartplug guide to getting started

Introduction

The purpose of this guide is to help the user fully use the PLM smartplug demonstration board in a network with other smartplug boards and a data concentrator.

The document describes how to configure the board and how to interact with it; buttons, LEDs, configuration jumpers, and all hardware components used, are described in detail. A full description of the power line communication and its configuration and commands is also provided.

The PLM smartplug demonstration board is based on the STM32F103VE microcontroller, the ST7540 PLM module, and the STPM01 mono-phase energy metering IC. It implements a PLM smartplug node which allows to monitor energy consumption of a mains plug and to control it in on/off mode by a relay or in dimming through the T2035H Triac.

The voltage, current, power, active energy and the output status can be sent to a PLM data concentrator through a power line communication network on request. Moreover, if the power consumption changes, it is sent asynchronously to the data concentrator.

- *Section 1* describes document and library rules
- *Section 2* describes the smartplug hardware demonstration board, its modes, uses and limitations
- *Section 3* highlights how to use the smartplug board in a PLC network. Refer to the PLM smartplug FW UM1006 user manual for more firmware and communication protocol details
- *Section 4* shows the board schematics and BOM list. Refer to the PLM smartplug HW UM1005 user manual for more hardware details.

Contents

1 Document and library rules 5

1.1 Acronyms 5

2 PLM smartplug demonstration board 6

2.1 Board introduction 6

2.2 Main hardware components 8

2.3 Power-on and board usage 8

2.3.1 PLM smartplug application configuration 8

2.3.2 PLM smartplug application running 9

2.4 Board and application limitations 12

3 PLM network and frames 13

3.1 PLM network parameters 13

4 Bill of material 14

5 Schematics 24

6 Revision history 31

List of tables

Table 1. List of acronyms 5
Table 2. Jumper default position. 8
Table 3. Terminal commands 10
Table 4. Class variables description 11
Table 5. ST7540 configuration 13
Table 6. BOM 14
Table 7. Document revision history 31

List of figures

Figure 1. STEVAL-IHP002V1 smartplug demonstration board 6
Figure 2. STEVAL-IHP002V1 PLM smartplug demonstration board block diagram 7
Figure 3. Network example 9
Figure 4. Network example 1 11
Figure 5. Network example 2 12
Figure 6. Top page. 24
Figure 7. RS232 communication section 25
Figure 8. Power supply section 26
Figure 9. Power line communication section 27
Figure 10. MCU section 28
Figure 11. Energy meter 29
Figure 12. Output drivers 30

1 Document and library rules

This document uses the conventions described in the sections below.

1.1 Acronyms

Table 1 lists the acronyms used in this document.

Table 1. List of acronyms

Acronym	Meaning
APP	Application
API	Application programming interface
HAL	Hardware abstraction layer
RTOS	Real time operating system
PLM	Power line modem
PLC	Power line communication
MCU	Microcontroller unit
SPI	Serial peripheral interface
OOP	Object oriented programming

2 PLM smartplug demonstration board

2.1 Board introduction

The application described in this document refers to the STEVAL-IHP002V1 demonstration board (see UM1005).

Figure 1. STEVAL-IHP002V1 smartplug demonstration board

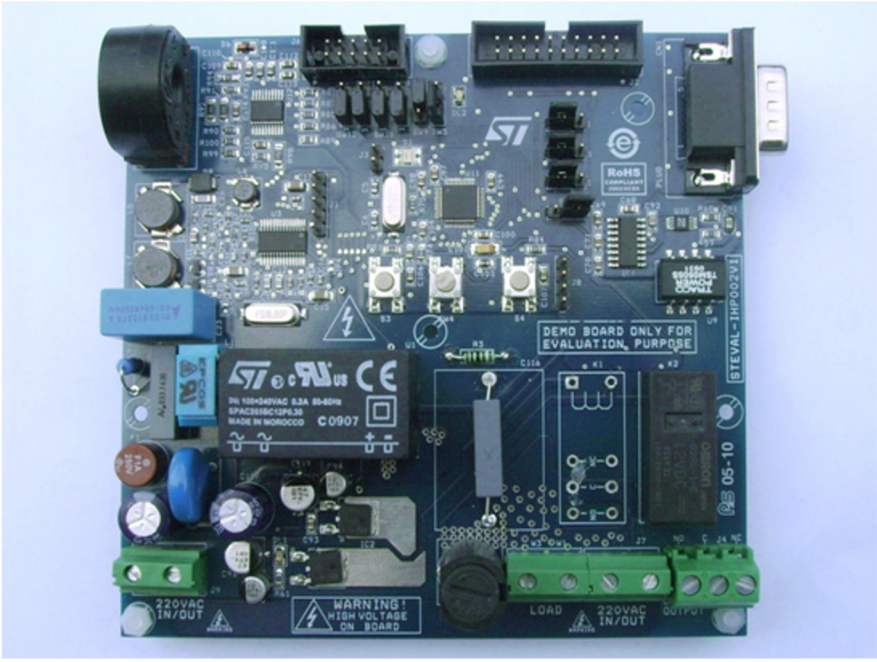

The board includes the following functions shown in the block diagram of *Figure 2*:

- Energy measurement by STPM01 IC
- Power line communication by ST7540 up to 4.8 kbps
- Isolated RS232 connectivity
- Main AC load driving by Relay or Triac (by T2035H)
- Auxiliary on/off contact for generic load driving.

Figure 2. STEVAL-IHP002V1 PLM smartplug demonstration board block diagram

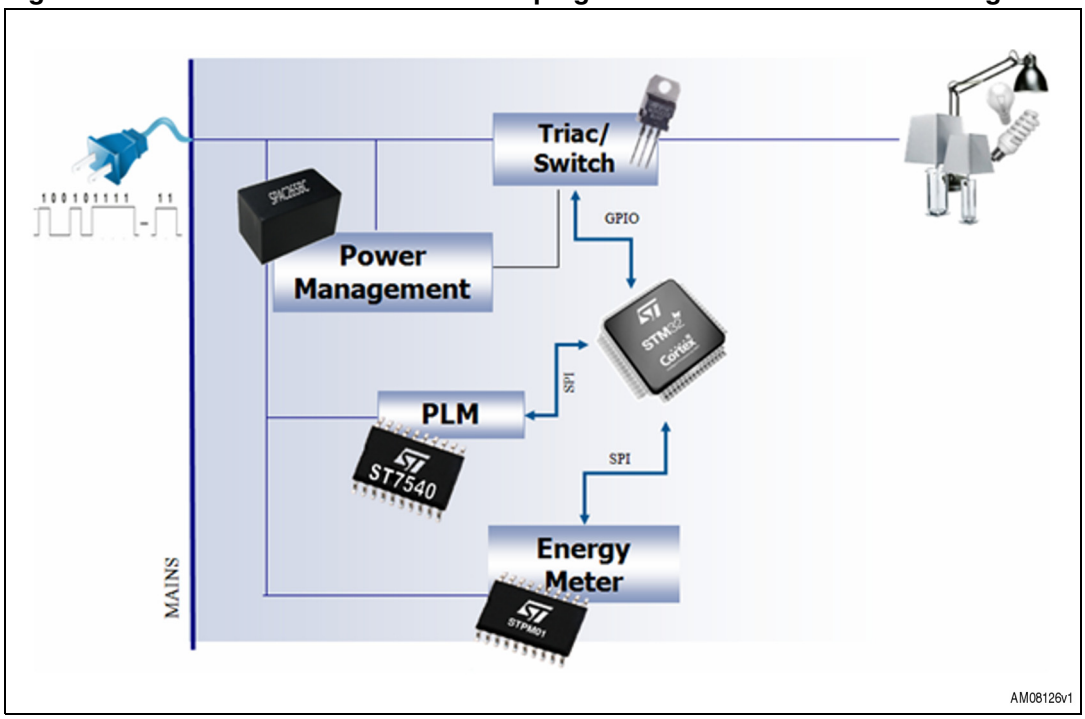

Warning: **The board must be used only by expert technicians. Due to the high voltage (220 Vac) special care should be taken with regard to human safety. There is no protection against accidental human contact with high voltages. After disconnection of the board from the mains, none of the live parts should be touched immediately because of the energized capacitors. It is mandatory to use a mains insulation transformer to perform any debugging/tests on the board in which debugging and test instruments like USB-JTAG dongles, spectrum analyzers, or oscilloscopes are used. Do not connect any oscilloscope probes to high voltage sections in order to avoid damaging instruments and demonstration tools.**
ST assumes no responsibility for any consequences which may result from the improper use of this tool.

2.2 Main hardware components

The following is a list of the PLM smartplug demonstration board main hardware components:

- An STM32F103CB microcontroller running the application firmware
- An STPM01 mono-phase energy metering IC
- An ST7540 power line modem: used to provide PLC connectivity to the system
- 1 bi-color status LED: green/red LED for application status scope
- 3 configuration jumpers (SW3, SW6, SW7): used for software configuration scope
- 2 user buttons (S3 and S4): used for user application scope
- 1 microcontroller reset button (SW4): used to force an MCU reset
- 4 jumpers for STPM01 calibration setting.

Detailed information about the PLM smartplug demonstration board hardware can be found in the UM1005 user manual.

2.3 Power-on and board usage

Before turning on the board for the first time, make sure that the following configuration jumpers are fitted or unfitted according the following default table:

Table 2. Jumper default position

Jumper	Description	Default
SW2, SW5	Boot option – Fitted (1-2): boot option bit 0 – Fitted (2-3): boot option bit 1	Fitted (1-2)
SW3, SW6, SW7,	General purpose configuration bit – Fitted (1-2): configuration bit 1 – Fitted (2-3): configuration bit 0	Fitted (2-3)
SW8, SW10, SW11, SW12	STPM01 calibration mode – Fitted (1-2): normal mode – Fitted (2-3): calibration mode	Fitted (1-2)
SW9	Energy meter data line option – Fitted (1-2): data line connected to SPI2-MISO – Fitted (2-3): data line connected to SPI2-MOSI	Fitted (1-2)

2.3.1 PLM smartplug application configuration

The general purpose configuration jumpers are used to configure the smartplug type:

- Relay: SW6=0, SW7=0, SW3=0
- Dimmer: SW6=1, SW7=0, SW3=0

Before powering up the board, these jumpers must be set according to the board type. The STPM01 is configured to work using the internal shadow latch which is loaded with parameters stored in the internal flash of the MCU; however the STPM01 can be calibrated by putting the jumpers SW8, SW10, SW11, and SW12 in calibration mode and using the on-

board calibration connector before powering up the board. For details please refer to the UM1005 user manual.

The first time the board is powered up, information regarding the addresses used for the communication protocol and the network functions, which are stored in the MCU embedded flash, are blank; therefore, after the first boot this information must be initialized using a PC software application running on a PC connected to the board by the RS232 port; for details about this configuration procedure please refer to the AN3046 application note. For the PLM smartplug board the procedure described in AN3046 must be used only for configuration purposes.

2.3.2 PLM smartplug application running

After configuration, the board can be used in a network; the address configuration of each board must be consistent with the chosen network topology: *Figure 3* shows an example of a network and the related network addresses and node function configuration.

Figure 3. Network example

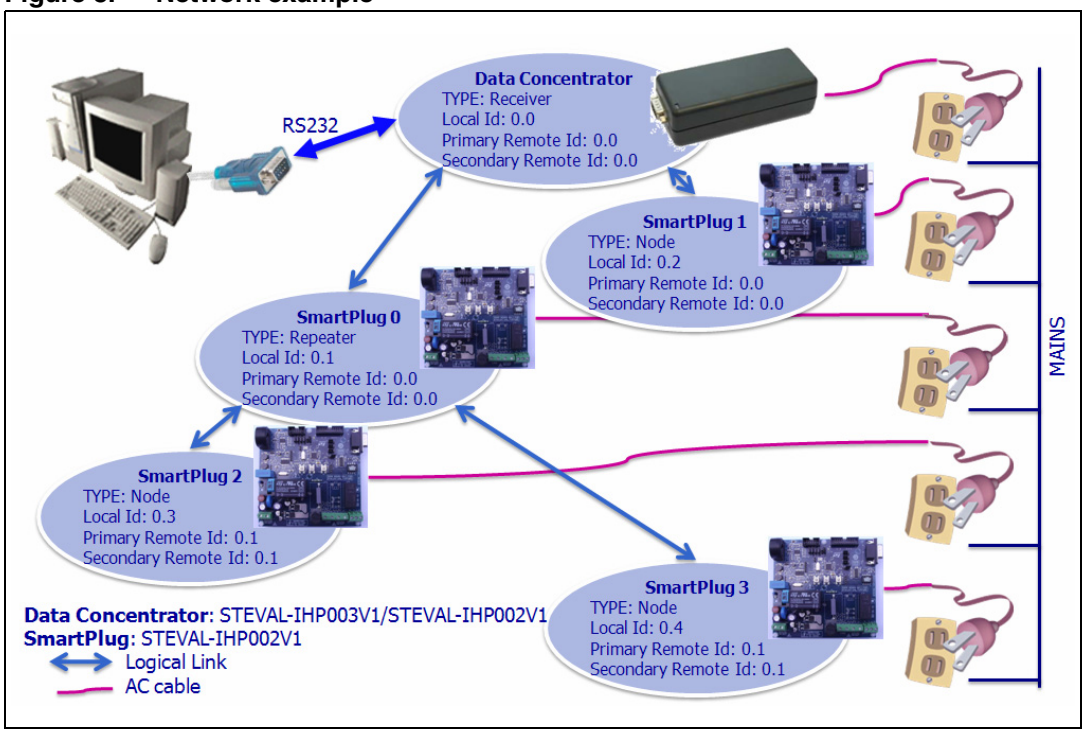

The data concentrator firmware is also provided in order to build a complete network solution; it can be loaded into one of the available smartplug boards (STEVAL-IHP002V1) or it is possible to order STEVAL-IHP003V1 separately, which has a better form factor for PC connection, and program it with the data concentrator firmware.

The data concentrator accepts commands, provides the command responses, and also the asynchronous messages from smartplugs and some debug information through the RS232 connection; a basic I/O text terminal has been implemented through this connection in order to provide the commands and print responses by text using a terminal PC software such as “HyperTerminal”; the local echo of the terminal software must be enabled in order to have a visual text feedback. Each text command must be completed by the <enter> key and are “case” sensitive. The following commands are implemented:

Table 3. Terminal commands

Commands	Description
“get”	Used to request information to a remote smartplug. After the command, the modem answers with the string “COMMAND->GET” to confirm the command acquisition and waits for one of the command classes which identify the data to request. The command classes are described in *Table 4*
“set”	Used to write information to a remote smartplug. After the command, the modem answers with the string “COMMAND->SET” to confirm the command acquisition and waits for one of the command classes which identify the data to write. The command classes are described in *Table 4*
“identify”	Used to identify a specific smartplug inside the network. After the command, the modem answers with the string “COMMAND->IDENTIFY” to confirm the command acquisition and wait for the string “single” followed by the <enter> key to complete the command. The command completion is confirmed by the string “CLS-> single”; after the command, the modem waits for the node ID to identify printing the string “<NODE_ID>”. The smartplug identified by the inserted node ID blinks its LEDs
“list”	Used to list the smartplug in the network already connected to the data concentrator. After the command, the modem answers with the string “COMMAND->LIST NODES” and with the list of the smartplug ID and address
“route”	Used to print the routing table. After the command, the modem answers with the string “COMMAND->ROUTE” and with the routing table

For the commands “get” and “set” it is possible to specify the class variable to write/read; *Table 4* describes these variables. The text terminal interface is also used to show debug information: each received frame is printed in hexadecimal format and the payload information is printed too, as shown in the following examples for the frame transferring all measurement information and for the one transferring the status information:

```
Frame Rx ->
00 00 03 00 00 02 01 BC 82 03 00 00 00 00 00 00 00 00 00 00 00 00 00
01 BC 82 03 00 00 00 00 00 00 00 00 00 00 00 00 00
RSP Voltage -> 230076   Current -> 0    Power -> 0      Energy -> 0

Frame Rx ->
00 00 03 00 01 02 02 01 FF FF
02 01 FF FF
RSP Type -> 1   Main Val -> 255 Aux Val -> 255
```

In addition to the debug information, the information extracted by the application layer is printed, as shown in the following example:

```
SmartPlug-id:voltage;current;power;
```

where

- id: SmartPlug ID (0..255)
- voltage: mains voltage in mV
- current: load current in mA
- power: load power consumption in W.

After setting a new status of the mains output the smartplug sends back a frame with the new status and the data concentrator prints out the following text message:

```
Status-id:status;
```

where

- id: SmartPlug ID (0..255)
- status: SmartPlug output status (0..255)

These strings can be easily interpreted by a PC application for a better presentation.

Table 4. Class variables description

Class	Description
“cons”	Information variable that stores the power consumption. It is a read-only variable.
“all”	Information variable that stores all measurements: – Voltage [mVolt] – Current [mA] – Power [mW] – Energy [Wh] It is a read-only variable.
“status”	Information variable that stores the status of both main output (relay/dimmer) and auxiliary output (relay).

On top of “text user interface” described above, a demo PC GUI has been developed working with only three smartplugs and one data concentrator. When the application is opened, it shows the window in *Figure 4*, which allows to open the COM port for communication with the data concentrator board and to use the text debug command and also show response messages.

Figure 4. Network example 1

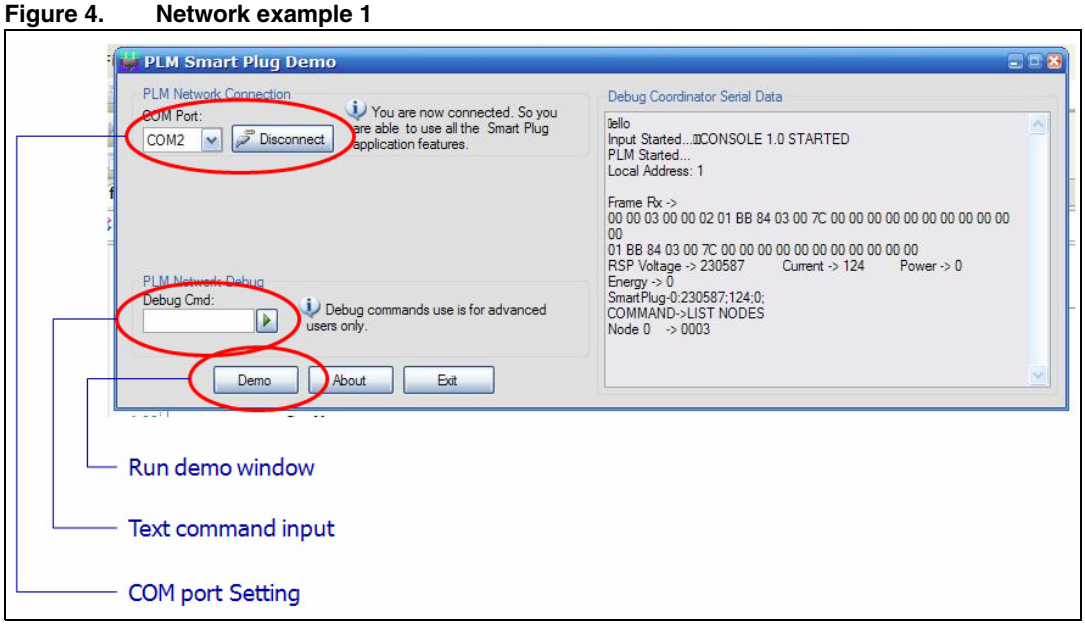

The demo window is shown by clicking on the “Demo” button, the window, illustrated in *Figure 5*, is shown.

Figure 5. Network example 2

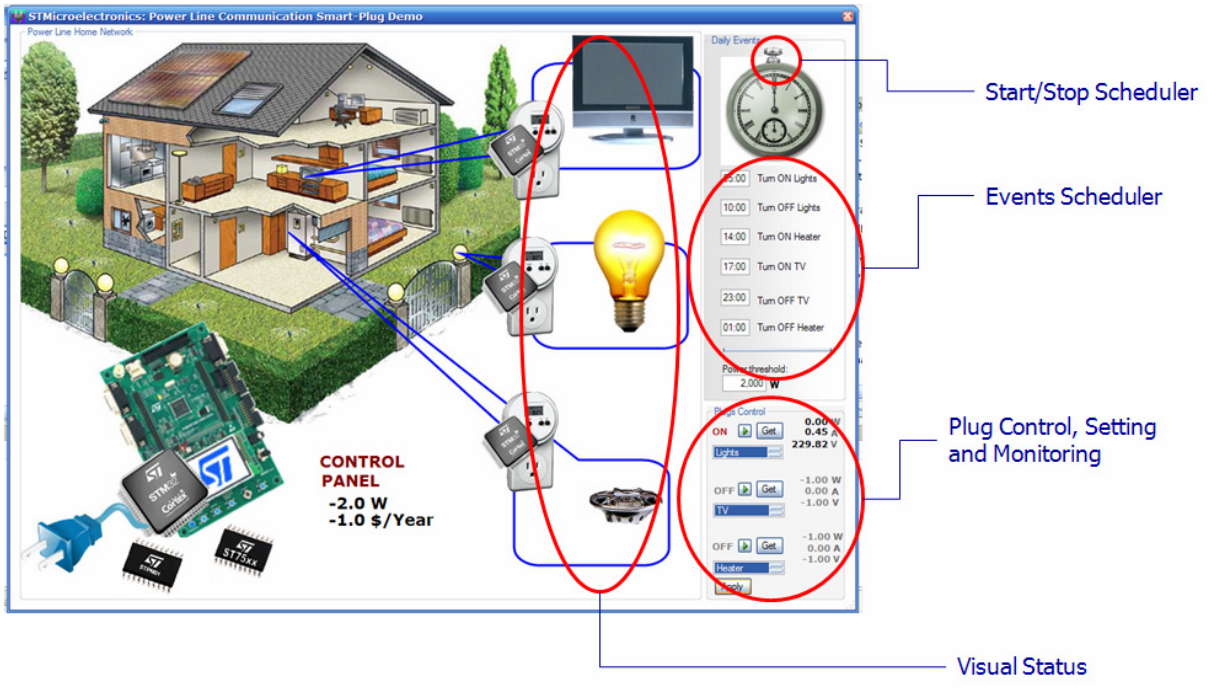

The window allows identifying, setting the label, getting information from each smartplug and monitoring the measurement variables. Once all labels are chosen, click the “Apply” button to assign them. The smartplug can be controlled manually by the “plug control, setting and monitoring” section or automatically by the “events scheduler” section of the window. Once the scheduler is set, click on the clock control to start/stop it. The status of the three smartplugs is also shown visually, considering three typical loads: a television, a lamp, and a heater.

The smartplug application layer sends measurement information periodically only if the measured power consumption changes, in order to avoid unnecessary network overload, so if you want to get “fresh” data click on the “Get” button of the smartplug from which you want data.

2.4 Board and application limitations

The smartplug is for demonstration purposes only so there are some limitations:

- At startup there is a delay before the smartplugs start to send data to the concentrator
- The STPM01 calibration hasn't been done to obtain the accuracy necessary for fiscal metrology
- The Triac has been tested with a maximum load equal to 1 kW

3 PLM network and frames

Details regarding the network information and frames can be found in the PLM smartplug FW UM1006 user manual and in the AN3046 application note.

3.1 PLM network parameters

During startup, each node configures the ST7540 with the following parameters:

Table 5. ST7540 configuration

Configuration parameter	Parameter value
Carrier frequency	132.5 kHz
Baud rate	2400 bps
Deviation	0.5
Watchdog	Disabled
Transmission timeout	Disabled
Frequency detection time	300 mSec.
Detection method	Preamble detection with conditioning
Mains interfacing mode	Synchronous
Output clock	Off
Output voltage level freeze	Disabled
Header recognition	Enabled
Frame length count	Disabled
Header length	16 bits
Extended register	Enabled
Sensitivity mode	Sensitivity high
Input filter	Enabled
Frame header	0xE389
Frame length	1
Configuration bytes values	0x1 0x89 0xE3 0xF7 0x94 0x17

4 Bill of material

Table 6. BOM

Reference	Part / value	Tolerance %	Voltage current	Watt	Technology information	Package-foot-print	Manufacturer	Manufacturer code	RS/Distrelec/ other code	More info
CN1	PORT 0				9-way r/a PCB D plug, US footprint 8.1 mm	Through hole	Any		RS code: 160-2590	
C1	2.2 µF	+/-10 %	50 V		Ceramic capacitor X7R	SMD 0805				
C5, C6	22 pF	+/-10 %	50 V		Ceramic capacitor X7R	SMD 0805				
C7	470 nF	+/-10 %	50 V		Ceramic capacitor X7R	SMD 0805				
C11, C12	33 pF	+/-10 %	50 V		Ceramic capacitor X7R	SMD 0805				
C14, C27, C103	10 nF	±10 %	50 V		Ceramic capacitorX7R	SMD 0603	muRata	GRM188R71H103KA01D	RS code: 204-0779	
C114, C115	10 nF	+/-10 %	50 V		Ceramic capacitor X7R	SMD 0805				
C15, C17, C24	10 µF	±10 %	16 V		Ceramic capacitorX7R	SMD 1206	Kemet	C1206C106K4PAC7800	RS code: 648-0755	
C16, C18, C25	100 nF	±10 %	50 V		Ceramic capacitorX7R	SMD 0603	muRata	GRM188R71H104KA93D	RS code: 624-2480	
C22	10 µF	±10 %	10 V		Ceramic capacitor X5R	SMD 0805	muRata	GRM21BR61A106KE19L	RS code: 106-846	
C116	47 nF	+/-10 %	300 V		X2 Capacitor	Through Hole	Any		RS code: 441-9600	
C101	10 µF	10 %	10 V		Tantalium capacitor	SMD	Any		RS code: 464-7619	

Table 6. BOM (continued)

Reference	Part / value	Tolerance %	Voltage current	Watt	Technology information	Package-foot-print	Manufacturer	Manufacturer code	RS/Distrelec/ other code	More info
C23	68 nF	±20 %	300 V		X2 Capacitor	Through Hole	Any		Distrelec code: 821885	
C26	6.8 nF	±5 %	50 V		Ceramic capacitor COG	SMD 1206	muRata	GRM3195C1H682JA01D	RS code: 624-2597	
C30	15 pF	±5 %	50 V		Ceramic capacitor COG	SMD 0402	muRata	GRM1555C1H150JZ01D	RS code: 624-2935	
C31	22 pF	±5 %	50 V		Ceramic capacitor COG	SMD 0402	muRata	GRM1555C1H220JZ01D	RS code: 624-2187	
C32	270 pF	±5 %	50 V		Ceramic capacitor COG	SMD 0603	Kemet	C0603C271J5GAC7867	RS code: 147-207	
C21, C33	100 pF	±5 %	50 V		Ceramic capacitor COG	SMD 0603	muRata	GRM1885C1H101JA01D	RS code: 653-0327	
C68,C69, C70,C71, C102,C105 ,C106, C107,C93, C97,C98, C99,C100, C104,C109 ,C110, C111,C112 ,C113	100 nF	+/-10 %	50 V		Ceramic capacitor X7R	SMD 0805				
C91, C92	47 nF	+/-10 %	50V		Ceramic capacitor X7R	SMD 0805				
C94, C95	10 µF	+/-20 %	50 V		Electrolytic capacitor	SMD	Any		RS code: 536-9859	
C108	1 nF	+/-10 %	50 V		Ceramic capacitor X7R	SMD 0805				

Table 6. BOM (continued)

Reference	Part / value	Tolerance %	Voltage current	Watt	Technology information	Package-foot-print	Manufacturer	Manufacturer code	RS/Distrelec/ other code	More info
C117, C118	470 µF	+/-20 %	25 V		Electrolytic capacitor low ESR	Through hole	Any		Distrelec code: 801846	
C96, C119	47 µF	+/-20 %	25 V		Electrolytic capacitor	SMD	Any		RS code: 565-712	
C120	33 nF	+/-10 %	275 V		X2 capacitor	Through hole	Any		RS code: 118-148	
DL1	Red				Chip LED	SMD 0805	Any		Distrele code: 250154	
DL2	Blue				Chip LED	SMD 0805	Any		Distrele code: 250159	
D1	Bi-color LED red / green				LED Bi-Red, Green	SMD	Any		RS code: 419-053	
D6, D12, D13	LL4148				Switching diode_	SOD-80	Any		Distrelec code: 601496	
D8, D10	BAT54S				Small signal Schottky diodes	SOT-23	STMicroelectronics	BAT54SFILM		
D9	SM6T15 CA				Transil	SMB	STMicroelectronics	SM6T15CA		
D11	STPS14 0U				Power Schottky rectifier	SMB	STMicroelectronics	STPS140U		
F1	1 A				TR5 anti-surge submin PCB T fuse	Through hole	Any		RS code: 611-0658	
F2	15 A		250 V/15 A		Min fuse 15 A 5x20 mm				RS code: 541-4599	
Socket for F2					Socket for F2	Through hole	Wickmann	652	Distrelec code: 273260	

Table 6. BOM (continued)

Reference	Part / value	Tolerance %	Voltage current	Watt	Technology information	Package-foot-print	Manufacturer	Manufacturer code	RS/Distrelec/ other code	More info
Cap for socket	Cap for socket				Cap for socket		Wickmann	655	Distrelec code: 273262	
IC1	ST3232 EBDR				RS-232 drivers and receivers	SO-16	STMicroelectronics	ST3232EBDR		
IC2	LD1117 DT50TR				Low drop fixed and adjustable positive voltage regulators	DPAK	STMicroelectronics	LD1117DT50TR		
IC3	LD1117 ADT33T R				Low drop fixed and adjustable positive voltage regulators	DPAK	STMicroelectronics	LD1117ADT33T R		
JP4,JP5	Close				Do not fit	Do not fit	Do not fit	Do not fit	Do not fit	
J1	Peak meter connect or				5-way single row strip line connector (male connector) 2,54 mm pitch	Vertical through hole	Any		RS code:495-8470	
J8	Rfid reader				4-way single row strip line connector (male connector) 2,54 mm pitch	Vertical through hole	Any		RS code:495-8470	
J2	JTAG				20-way IDC low profile boxed header 2,54 mm pitch	Vertical through hole	Any		RS code: 461770	

Table 6. BOM (continued)

Reference	Part / value	Tolerance %	Voltage current	Watt	Technology information	Package-foot-print	Manufacturer	Manufacturer code	RS/Distrelec/ other code	More info
J3	CON2				2-way single row strip line connector (male connector) 2.54 mm pitch	Vertical through hole	Any		RS code:495-8470	
J4	CON3				3-way screw terminal block 5.08 mm pitch	Through hole	Any		RS code:189-5865	
J6	CAL CON				10-way IDC low profile boxed header 2.54 mm pitch	Vertical through hole	Any		RS code: 461-742	
J7,J9	CON2				2-way screw terminal block 7.5 mm pitch	Through hole	Phoenix Contact	1988105	RS code: 548-7301	
L1	2x10 mH		0.5 A		Line filter	Through hole	Any		Distrelec code: 351276	
L5	22 µH	±10 %	2.1 A		Smd inductor	SMD	EPCOS	B82464A4223K	RS code: 496-0445	
L6	220 µH	±10 %	240 mA		Smd inductor	SMD	EPCOS	B82462A4224K	RS code: 495-8048	
L7,L9	1 mH	±10 %	330 mA		Smd inductor	SMD	EPCOS	B82464A4105K	RS code: 496-0530	
L8	10 µH	±10 %	1 A		Smd inductor	SMD	EPCOS	B82442H1103K	RS code: 496-1268	
Q1,Q2	BC857B				PNP transistor	SOT23	Any		RS code: 445-2051	

Table 6. BOM (continued)

Reference	Part / value	Tolerance %	Voltage current	Watt	Technology information	Package-foot-print	Manufacturer	Manufacturer code	RS/Distrelec/ other code	More info
Q3	T2035H				High temperature 20 A Snubberless™ Triacs	D2PAK	STMicroelectronics	T2035H-6G-TR		
Q4,Q5	2STR12 15				Low voltage fast-switching NPN power transistor	SOT-23	STMicroelectronics	2STR1215		
R3	1 kΩ	+/-5 %		1/2 W	Resistor	Axial through hole				
R6	1.1 kΩ	+/-1 %		0.1 W	Resistor	SMD 0603				
R7	47 kΩ	+/-1 %		0.1 W	Resistor	SMD 0603				
R8	15 kΩ	+/-1 %		0.1 W	Resistor	SMD 0603				
R9	4.7 kΩ	+/-1 %		0.1 W	Resistor	SMD 0603				
R88,R108, R109	4.7 kΩ	+/-5 %		1/8 W	Resistor	SMD 0805				
R10	13 kΩ	+/-1 %		0.1 W	Resistor	SMD 0603				
R12	1 kΩ	+/-1 %		0.1 W	Resistor	SMD 0603				
R62,R68, R104,R106	1 kΩ	+/-5 %		1/8 W	Resistor	SMD 0805				
R13	2.7 kΩ	+/-1 %		0.1 W	Resistor	SMD 0603				
R14	1.8 kΩ	+/-1 %		0.1 W	Resistor	SMD 0603				
R17	470 Ω	+/-1 %		0.1 W	Resistor	SMD 0603				
R19	2.4 kΩ	+/-1 %		0.1 W	Resistor	SMD 0603				
R85,R86, R87	2.4 kΩ	+/-5 %		1/8 W	Resistor	SMD 0805				
R20	56 kΩ	+/-1 %		0.1 W	Resistor	SMD 0603				

Table 6. BOM (continued)

Reference	Part / value	Tolerance %	Voltage current	Watt	Technology information	Package-foot-print	Manufacturer	Manufacturer code	RS/Distrelec/ other code	More info
R21,R96, R97	261 kΩ	+/-1 %		1/4 W	Resistor	SMD 1206				
R59,R60	0	+/-5 %		1/8 W	Resistor	SMD 0805				
R61,R89	560 Ω	+/-5 %		1/8 W	Resistor	SMD 0805				
R63,R64, R65,R66, R71,R72, R73,R74, R76,R77, R80,R81, R82,R83, R84	10 kΩ	+/-5 %		1/8 W	Resistor	SMD 0805				
R67	(Not mounted)	+/-5 %		1/8 W	Resistor	SMD 0805				
R69,R70	82 Ω	+/-5 %		1/4 W	Resistor	SMD 1206				
R75	1 MΩ	+/-5 %		1/8 W	Resistor	SMD 0805				
R91,R92	6.8 Ω	+/-1 %		1/4 W	Resistor	SMD 1206				
R94	2 MΩ	+/-1 %		1/8 W	Resistor	SMD 0805				
R98	475 Ω	+/-1 %		1/4 W	Resistor	SMD 1206				
R99	43 kΩ	+/-1 %		1/8 W	Resistor	SMD 0805				
R100	100 Ω	+/-1 %		1/8 W	Resistor	SMD 0805				
R101	1 kΩ	+/-1 %		1/4 W	Resistor	SMD 1210				
R102	22 Ω	+/-1 %		1/4 W	Resistor	SMD 1210				
R103,R105	1 kΩ (do not fit)	+/-1 %		1/4 W	Resistor	SMD 1210				
R90,R93	1 kΩ	+/-1 %		1/8 W	Resistor	SMD 0805				

Table 6. BOM (continued)

Reference	Part / value	Tolerance %	Voltage current	Watt	Technology information	Package-foot-print	Manufacturer	Manufacturer code	RS/Distrelec/ other code	More info
R95	0	+/-1 %		1/8 W	Resistor	SMD 0805				
R107	10	5 %		1 W	Fuse resistor	Axial through hole	Any		RS code: 214-0879	
RV1	S14K510	10 %	510 VAC		Disk-shaped metal-oxide varistors	Through hole	Epcos	B72214S0511K101	Distrelec code: 730933	
SW2	BOOT_0				3-way single row strip line connector (male connector) 2.54 mm pitch	Vertical through hole	Any		RS code:495-8470	Single strip line 3 pole
SW3	CONF3				3-way single row strip line connector (male connector) 2.54 mm pitch	Vertical through hole	Any		RS code:495-8470	Single strip line 3 pole
SW4	Rst				Surface mount tactile switch	SMD	Any		RS code 183701	
SW5	BOOT_1				3-way single row strip line connector (male connector) 2.54 mm pitch	Vertical through hole	Any		RS code:495-8470	Single strip line 3 pole
SW6	CONF0				3-way single row strip line connector (male connector) 2.54 mm pitch	Vertical through hole	Any		RS code:495-8470	Single strip line 3 pole

Table 6. BOM (continued)

Reference	Part / value	Tolerance %	Voltage current	Watt	Technology information	Package-foot-print	Manufacturer	Manufacturer code	RS/Distrelec/ other code	More info
SW7	CONF1				3-way single row strip line connector (male connector) 2.54 mm pitch	Vertical through hole	Any		RS code:495-8470	Single strip line 3 pole
SW8,SW9, SW10,SW 11,SW12	Calibrati on settings				3-way single row strip line connector (male connector) 2.54 mm pitch	Vertical through hole	Any		RS code:495-8470	Single strip line 3 pole
S3,S4	SW push				Surface mount tactile switch	SMD	Any		RS code 183701	
TP8,TP9, TP10,TP11 ,TP12, TP13,TP14 ,TP15, TP16,TP17 ,TP18, TP19,TP20 ,TP21, TP22,TP23 ,TP25, TP26,TP27	Test point				Test point	Test point	Test point	Test point	Test point	
T1	Current transfor mer				Current transformer	Through Hole	VAC	T60404-E 4622-X503		
U1	SPAC26 5-3W				AC-DC switch mode power supply	Through hole	ST Microelectronics	SPAC265BC12P 0.30		
U3	ST7540				FSK power line transceiver	HTSSOP28	ST Microelectronics	ST7540TR		

Table 6. BOM (continued)

Reference	Part / value	Tolerance %	Voltage current	Watt	Technology information	Package-foot-print	Manufacturer	Manufacturer code	RS/Distrelec/ other code	More info
U9	TSM0505S				DC-DC converter	SOIC-14	Traco Power	TSM0505S	RS code: 510-5431	
U10	IL712S-1E				Bi-directional Digi Isolator	MSOP8	NVE	IL712S-1E	RS code: 418-436	
U11	STM32F103CBT6				Medium-density performance line ARM-based 32-bit MCU	LQFP48	ST Microelectronics	STM32F103CBT6		
U12	STPM01				Programmable single-phase energy metering IC with tamper detection	TSSOP20	ST Microelectronics	STPM01FTR		
W1 W3	Load				2-way screw terminal block 7.5 mm pitch	Through hole	Phoenix contact	1988105	RS code: 548-7301	
X1	16 MHz				16 MHz crystal	SMD	Any		RS code: 547-6531	
Y1	8 MHz				16 MHz crystal	SMD	Any		RS code: 671-9242	
k1	16 A 12 Vdc coil (Do not fit)		(Do not fit)		(Do not fit)	(Do not fit)	(Do not fit)	(Do not fit)	(Do not fit)	(Do not fit)
k2	16 A 12 Vdc coil		12 V/16 A		Lowprofile SPDT power relay	Through hole	OMRON	G2RL-1-E 12DC	RS code: 365-0535	

5 Schematics

Figure 6. Top page

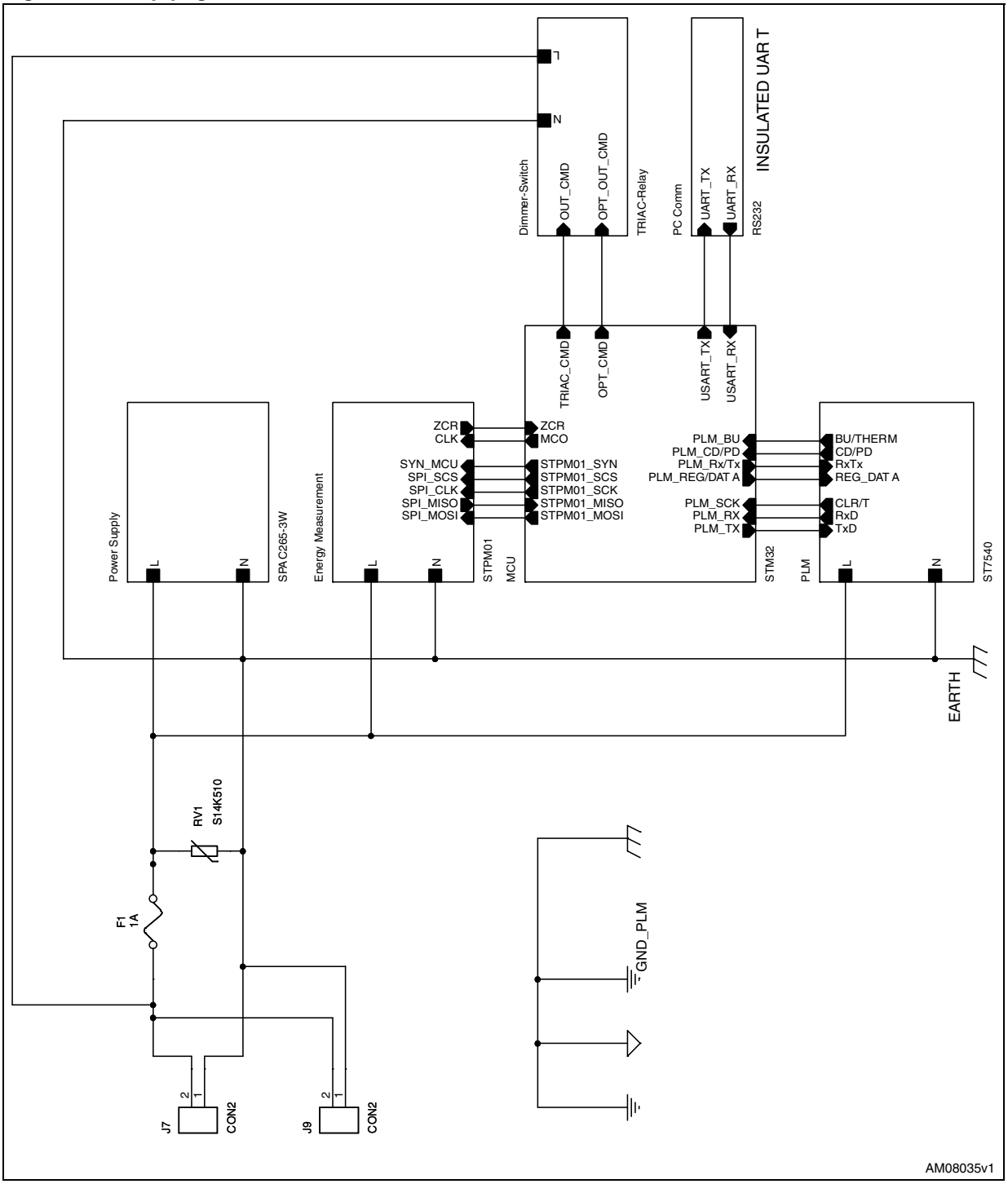

Figure 7. RS232 communication section

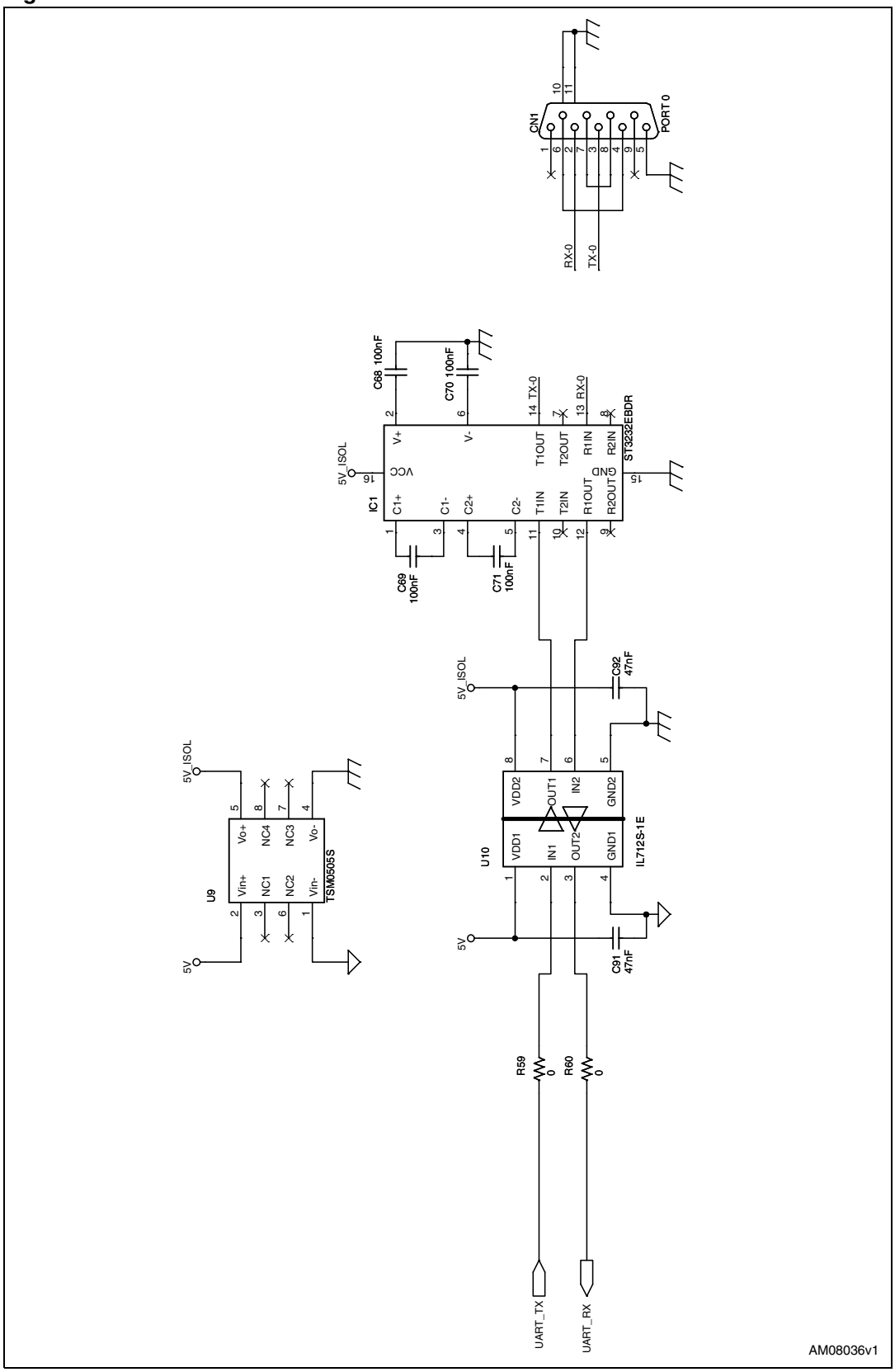

Figure 8. Power supply section

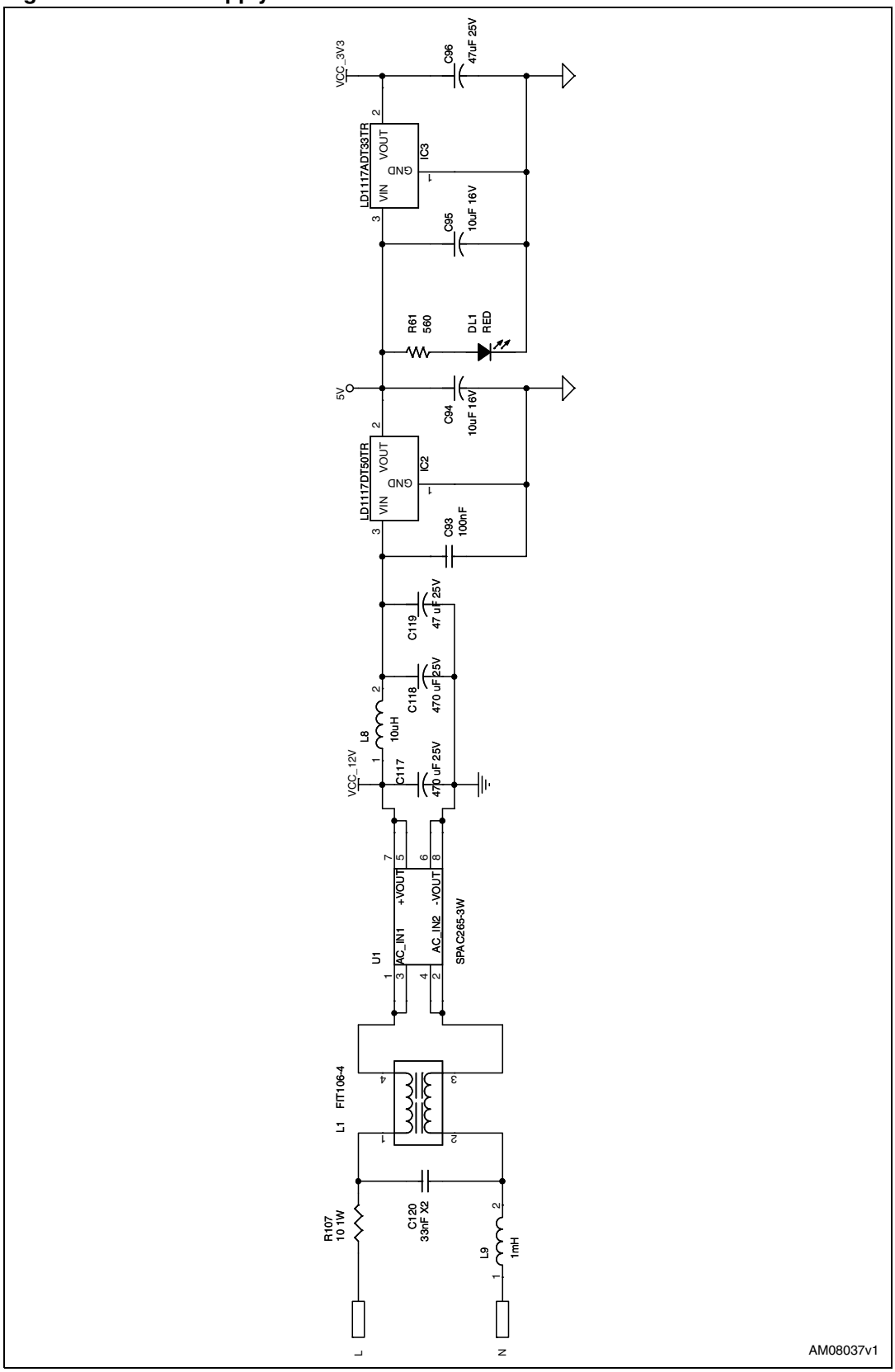

Figure 9. Power line communication section

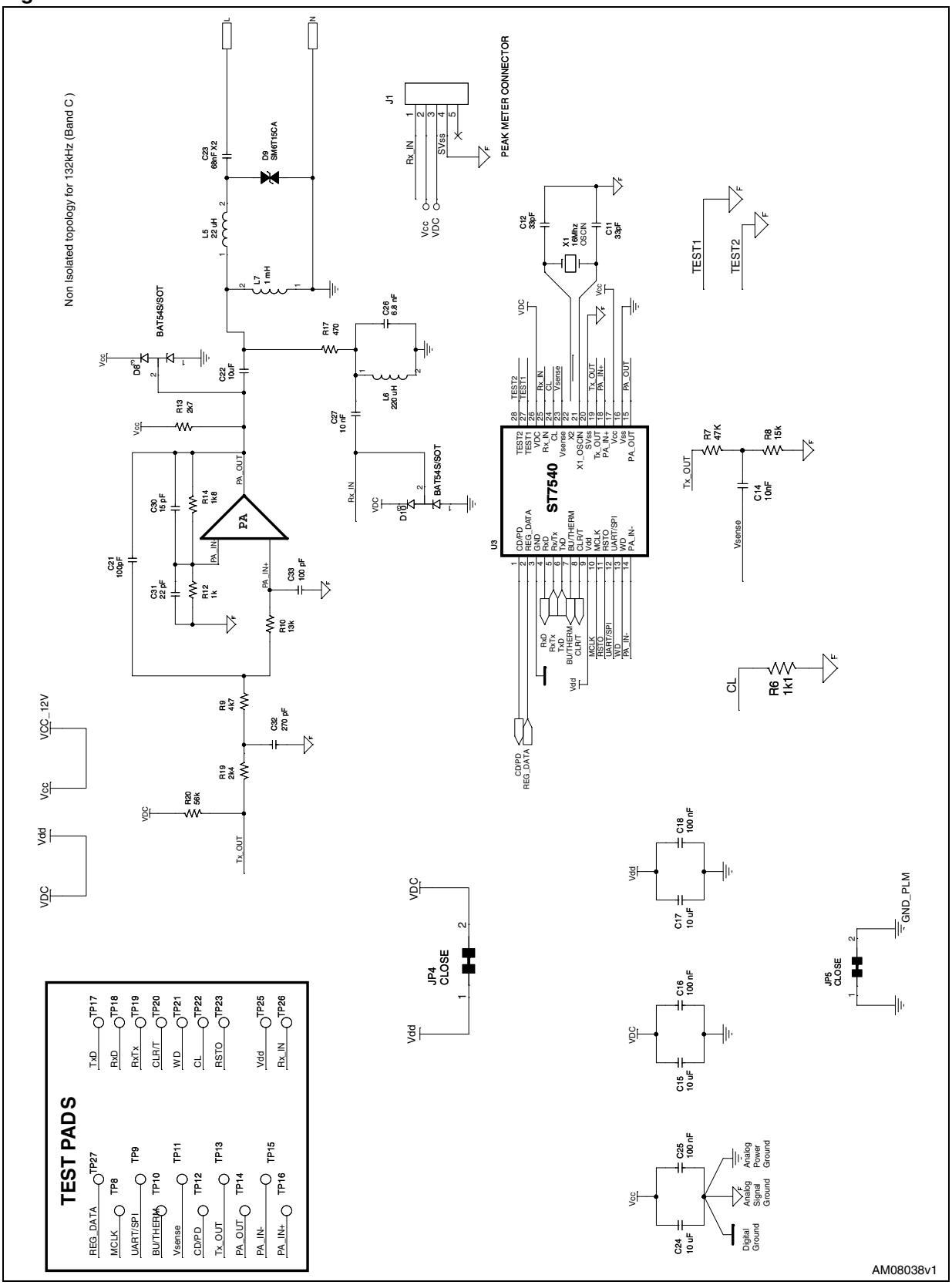

Figure 10. MCU section

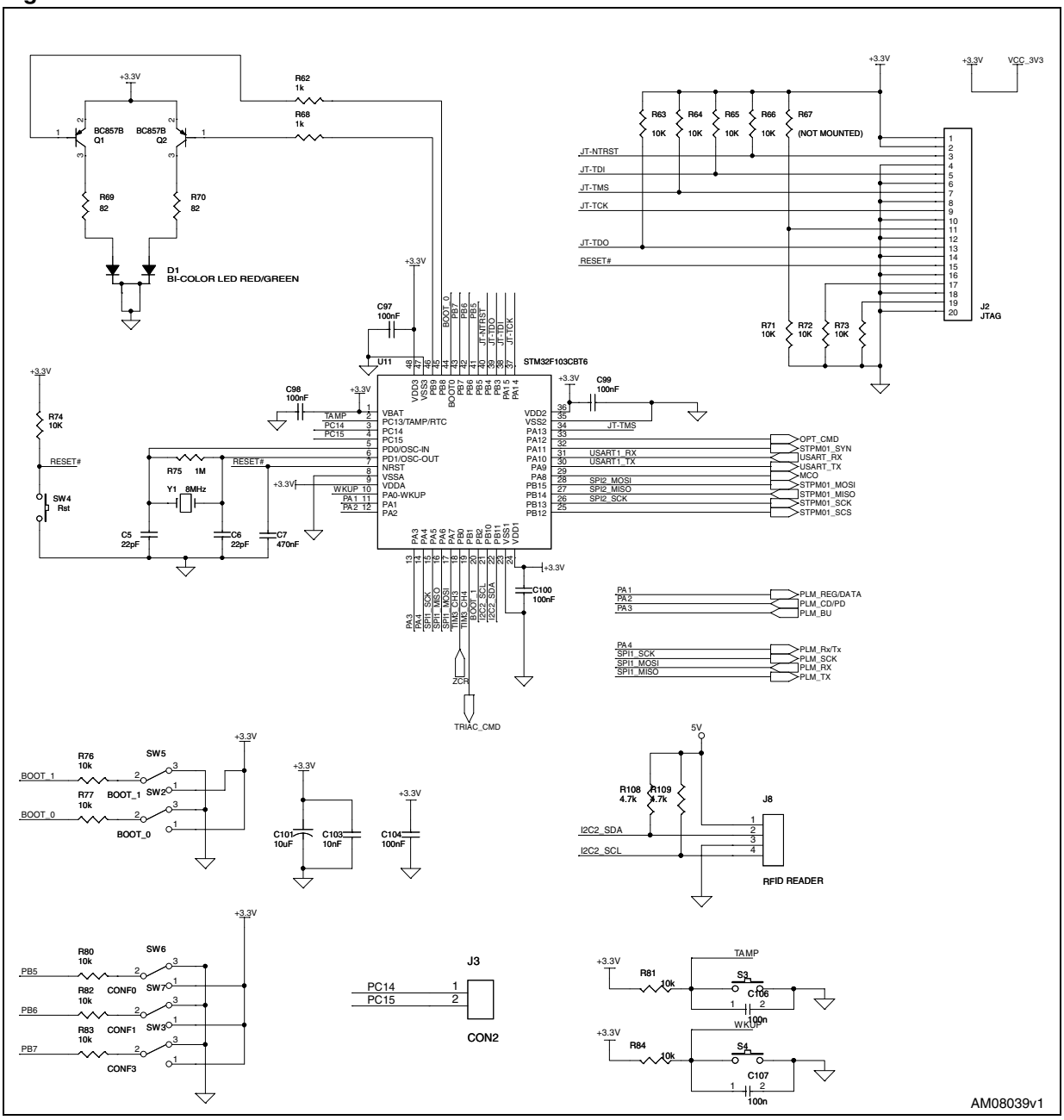

Figure 11. Energy meter

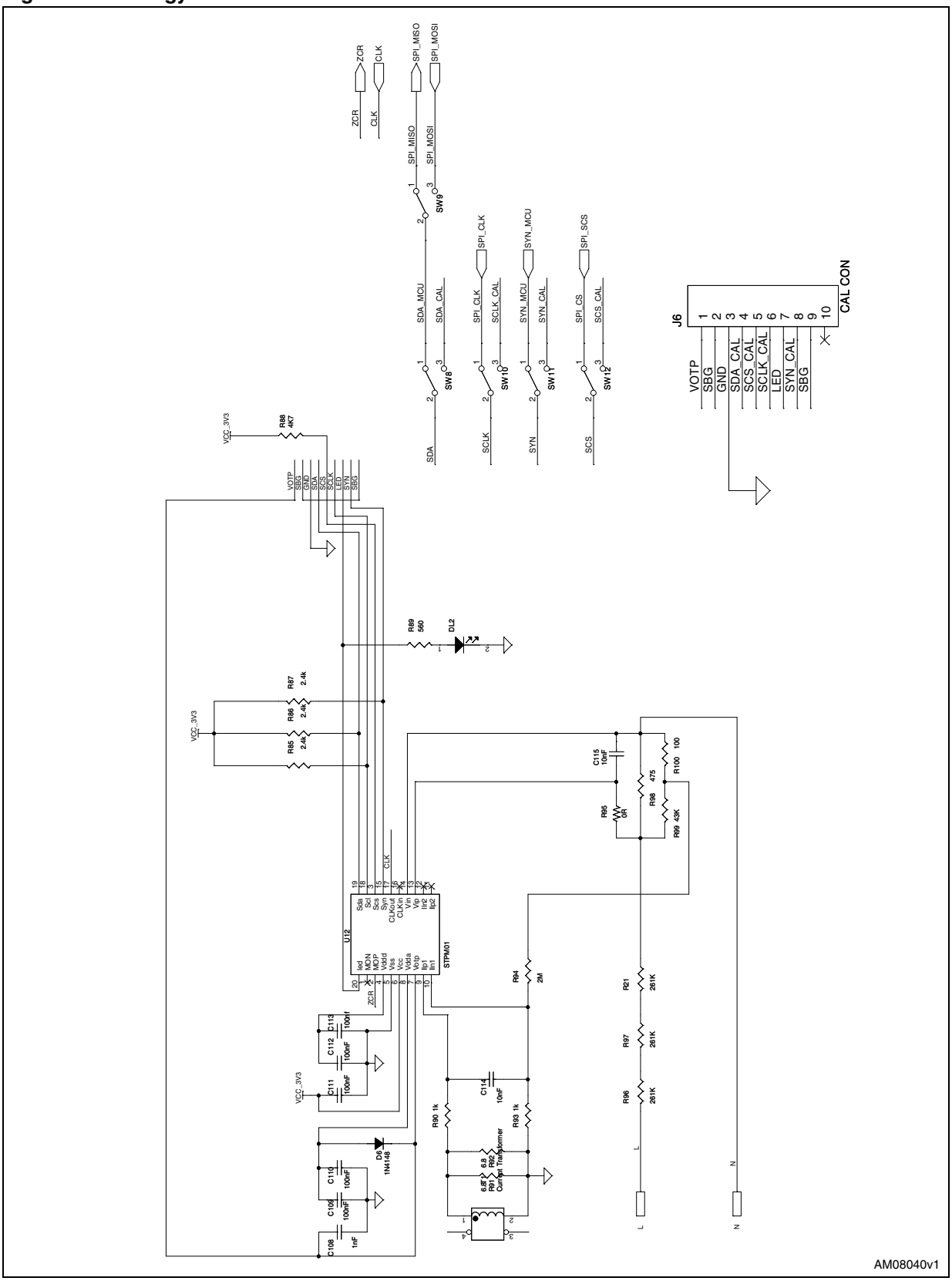

Figure 12. Output drivers

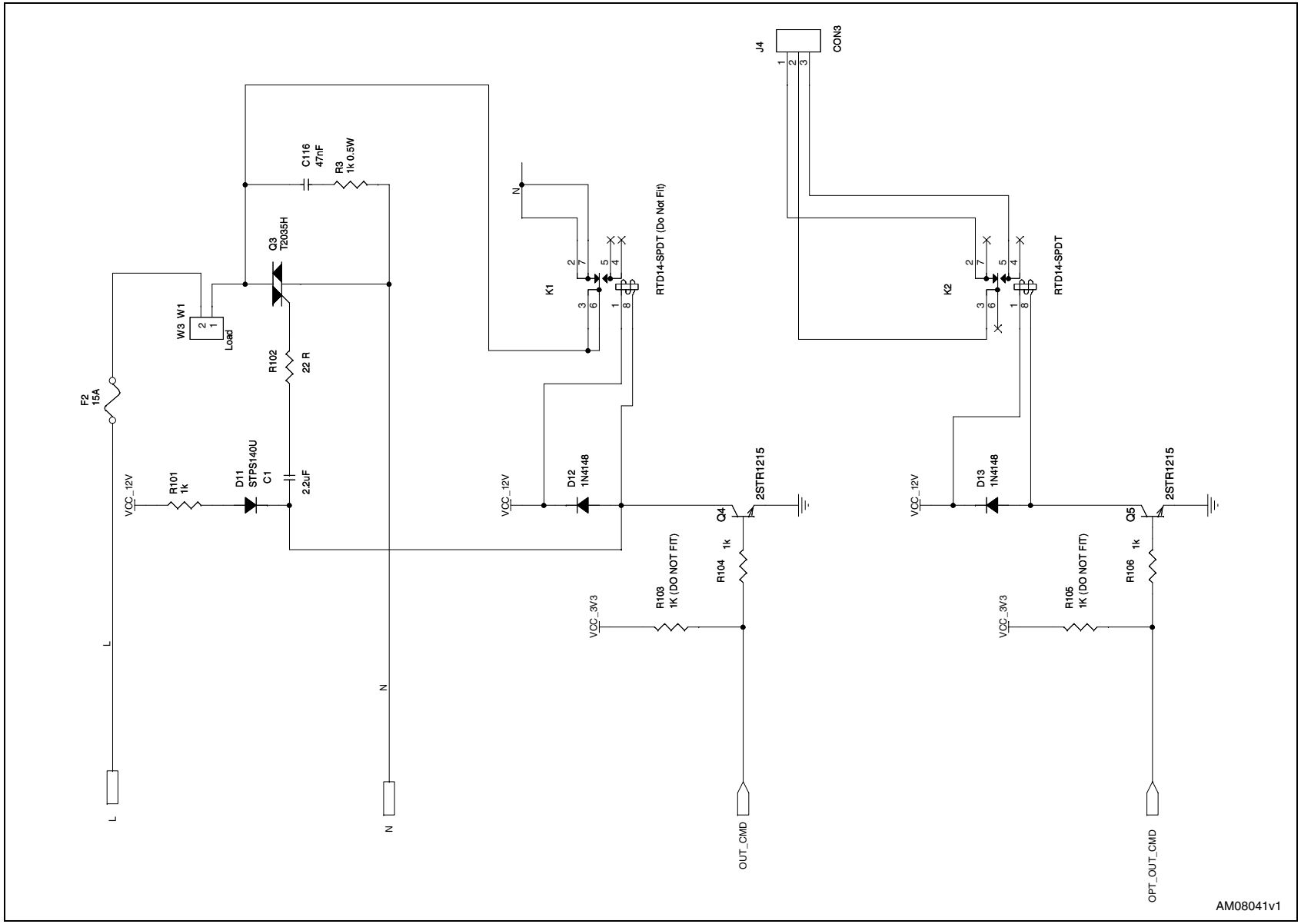

6 Revision history

Table 7. Document revision history

Date	Revision	Changes
10-Dec-2010	1	Initial release.

Please Read Carefully:

Information in this document is provided solely in connection with ST products. STMicroelectronics NV and its subsidiaries (“ST”) reserve the right to make changes, corrections, modifications or improvements, to this document, and the products and services described herein at any time, without notice.

All ST products are sold pursuant to ST’s terms and conditions of sale.

Purchasers are solely responsible for the choice, selection and use of the ST products and services described herein, and ST assumes no liability whatsoever relating to the choice, selection or use of the ST products and services described herein.

No license, express or implied, by estoppel or otherwise, to any intellectual property rights is granted under this document. If any part of this document refers to any third party products or services it shall not be deemed a license grant by ST for the use of such third party products or services, or any intellectual property contained therein or considered as a warranty covering the use in any manner whatsoever of such third party products or services or any intellectual property contained therein.

UNLESS OTHERWISE SET FORTH IN ST’S TERMS AND CONDITIONS OF SALE ST DISCLAIMS ANY EXPRESS OR IMPLIED WARRANTY WITH RESPECT TO THE USE AND/OR SALE OF ST PRODUCTS INCLUDING WITHOUT LIMITATION IMPLIED WARRANTIES OF MERCHANTABILITY, FITNESS FOR A PARTICULAR PURPOSE (AND THEIR EQUIVALENTS UNDER THE LAWS OF ANY JURISDICTION), OR INFRINGEMENT OF ANY PATENT, COPYRIGHT OR OTHER INTELLECTUAL PROPERTY RIGHT.

UNLESS EXPRESSLY APPROVED IN WRITING BY AN AUTHORIZED ST REPRESENTATIVE, ST PRODUCTS ARE NOT RECOMMENDED, AUTHORIZED OR WARRANTED FOR USE IN MILITARY, AIR CRAFT, SPACE, LIFE SAVING, OR LIFE SUSTAINING APPLICATIONS, NOR IN PRODUCTS OR SYSTEMS WHERE FAILURE OR MALFUNCTION MAY RESULT IN PERSONAL INJURY, DEATH, OR SEVERE PROPERTY OR ENVIRONMENTAL DAMAGE. ST PRODUCTS WHICH ARE NOT SPECIFIED AS "AUTOMOTIVE GRADE" MAY ONLY BE USED IN AUTOMOTIVE APPLICATIONS AT USER’S OWN RISK.

Resale of ST products with provisions different from the statements and/or technical features set forth in this document shall immediately void any warranty granted by ST for the ST product or service described herein and shall not create or extend in any manner whatsoever, any liability of ST.

ST and the ST logo are trademarks or registered trademarks of ST in various countries.

Information in this document supersedes and replaces all information previously supplied.

The ST logo is a registered trademark of STMicroelectronics. All other names are the property of their respective owners.

© 2010 STMicroelectronics - All rights reserved

STMicroelectronics group of companies

Australia - Belgium - Brazil - Canada - China - Czech Republic - Finland - France - Germany - Hong Kong - India - Israel - Italy - Japan - Malaysia - Malta - Morocco - Philippines - Singapore - Spain - Sweden - Switzerland - United Kingdom - United States of America

www.st.com